GUIDED COMPACT CYLINDER
Series 6100

	Page
General	1.0
Component description	1.1
Ordering Code, technical data	1.2
Dimension	1.3 - 1.4
Operating criteria	1.5 - 1.9
Magnetic sensors	1.10

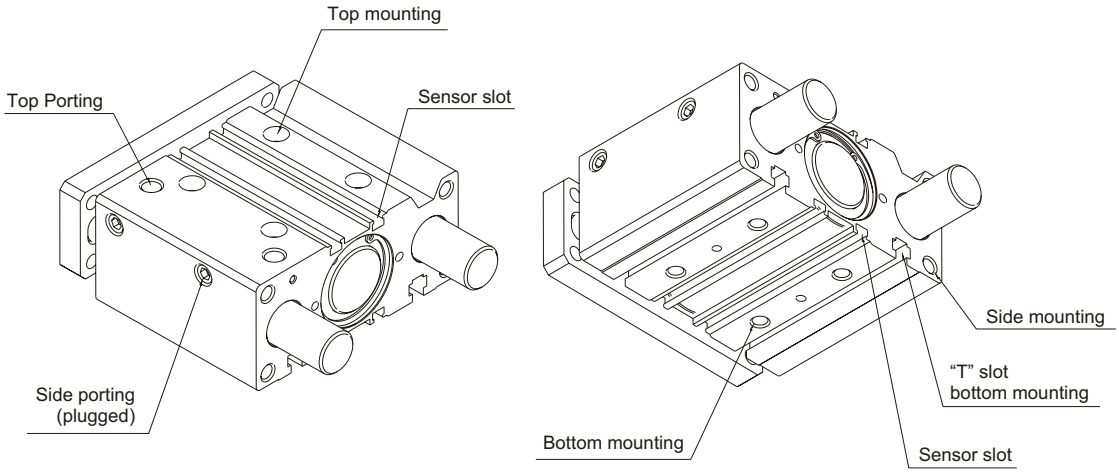

These guided compact cylinders, characterised by reduced overall dimensions, can be used for the compression, conveyance and manipulation of objects in many industrial sectors; similarly they can also be used in pushing, lifting and stopping applications.

These cylinders are available in sizes 32mm to 63 mm diameter, and comprise a single compact cylinder with integral guide rods, making it a true guide cylinder designed with installation flexibility and space saving at it's core.

The rod guide is available in two styles:
Self lubricating bronze bushes, useful for absorbing lateral loads and forces, especially as a stopper.
Bearing bushes, guaranteeing high precision and uniform movement with low friction characteristics, useful with misaligned loads.
Guided compact cylinders are ideal for use in applications requiring a combination of reduced dimensions and anti-rotation features. Mounting can be achieved on three sides through holes or "T" slots.

Adjustable mounting holes in the front plate ensure safe and accurate assembly. Pneumatic connections can be made to either lateral or top ports, (lateral ports plugged on standard units).
When sensors are required, there are special slot in the barrel extrusion where 1580 series miniaturized sensors are easily fitted.

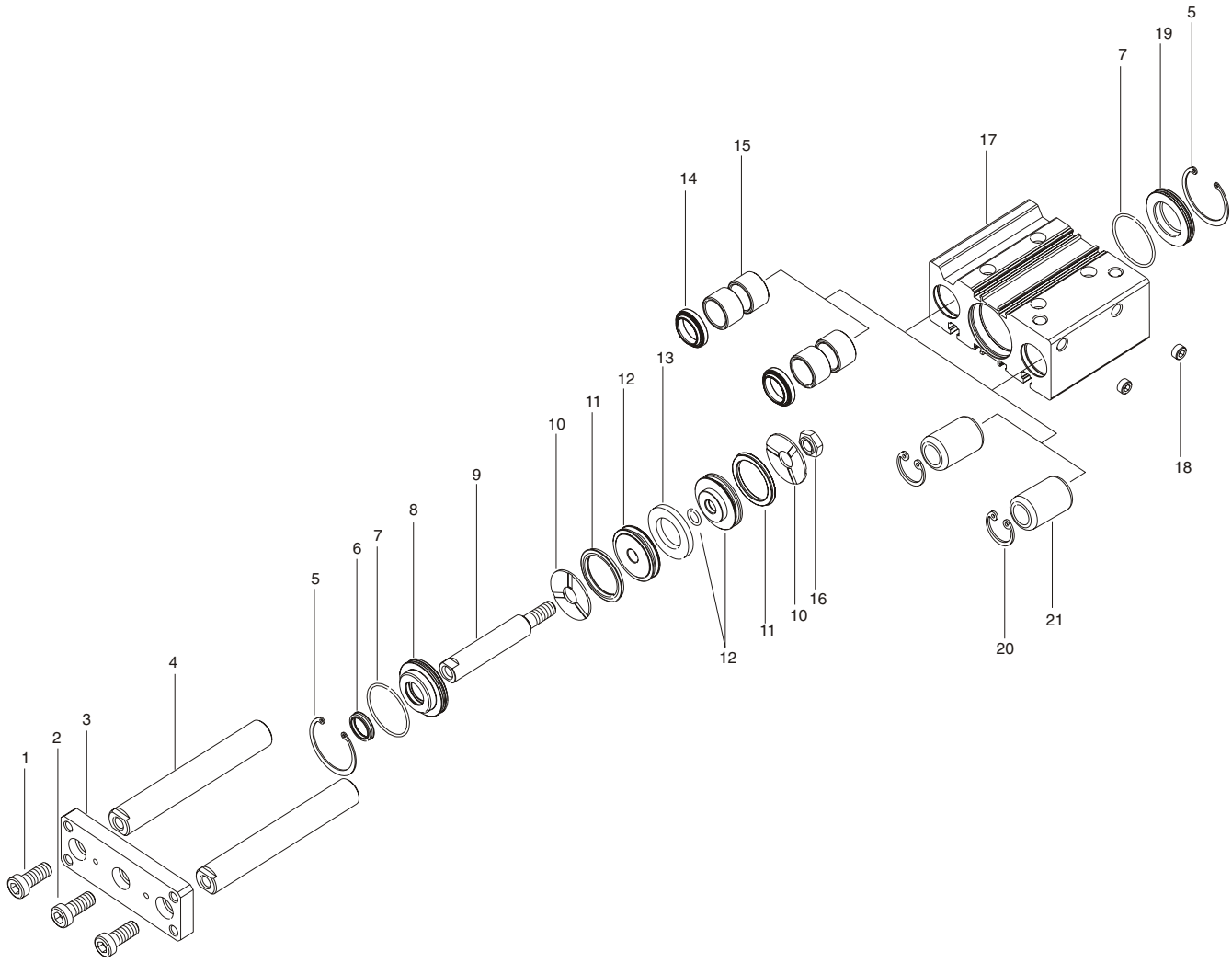

Pos.	Item	Qty.	Pos.	Item	Qty.
1	Guide rod screw	2	13	Magnet	1
2	Piston rod screw	1	14	Wiper	2
3	Plate	1	15	Bronze bush	4*
4	Rod	2	16	Piston rod nut	1
5	Circlip	2	17	Body	1
6	Piston rod seal	1	18	Plug	2
7	Seal	2	19	End plate	1
8	Bushing	1	20	Circlip	2
9	Piston rod	1	21	Bearing bush	4**
10	Cushiuning washer	2	* N. 2 pieces for strokes under 50 mm (for bores ø20,25,32)		
11	Piston seal	2	** N. 2 pieces for strokes under 50 mm (for bores ø20,25,32)		
12	Half piston	2	N. 2 pieces for strokes under 50 mm (for bores ø40,50,63)		

Ordering code

6100.Ø.stroke.

- **B** = Control unit with Bronze bush
- **C** = Control unit with Bearing bush

- 20
- 25
- 32
- 40
- 50
- 63

Magnetic sensors: see page 1.10

Construction characteristics

Body	oxidated aluminium alloy
Guide rods	C43 chromed steel (control unit with Bronze bush) tempered and chromed steel (control unit with Bearing bush)
Piston	aluminium
Piston rod	AISI303 chromed stainless steel (for bores ø20, ø25) C43 chromed steel (for bores ø32, ø40, ø50, ø63)
Rods bushing	bronze or bearing bushing
End plate	oxidated aluminium
Piston seal	oil resistant NBR rubber
Piston rod seal	self lubricating polyurethane compound
Wipers	oil resistant NBR rubber
Plate	nickel plated steel

Technical characteristics

Function	double acting
Fluid	filtered and lubricated or non lubricated air
Working pressure	max. 10 bar
Working temperature	-5°C ÷ +70°C
Cushioning	elastic bumper on both ends

Standard storke

Bore	20	25	30	40	50	75	100	125	150	175	200
Ø20	●		●	●	●	●	●	●	●	●	●
Ø25	●		●	●	●	●	●	●	●	●	●
Ø32		●			●	●	●	●	●	●	●
Ø40		●			●	●	●	●	●	●	●
Ø50		●			●	●	●	●	●	●	●
Ø63		●			●	●	●	●	●	●	●

Dimension of "T" slot

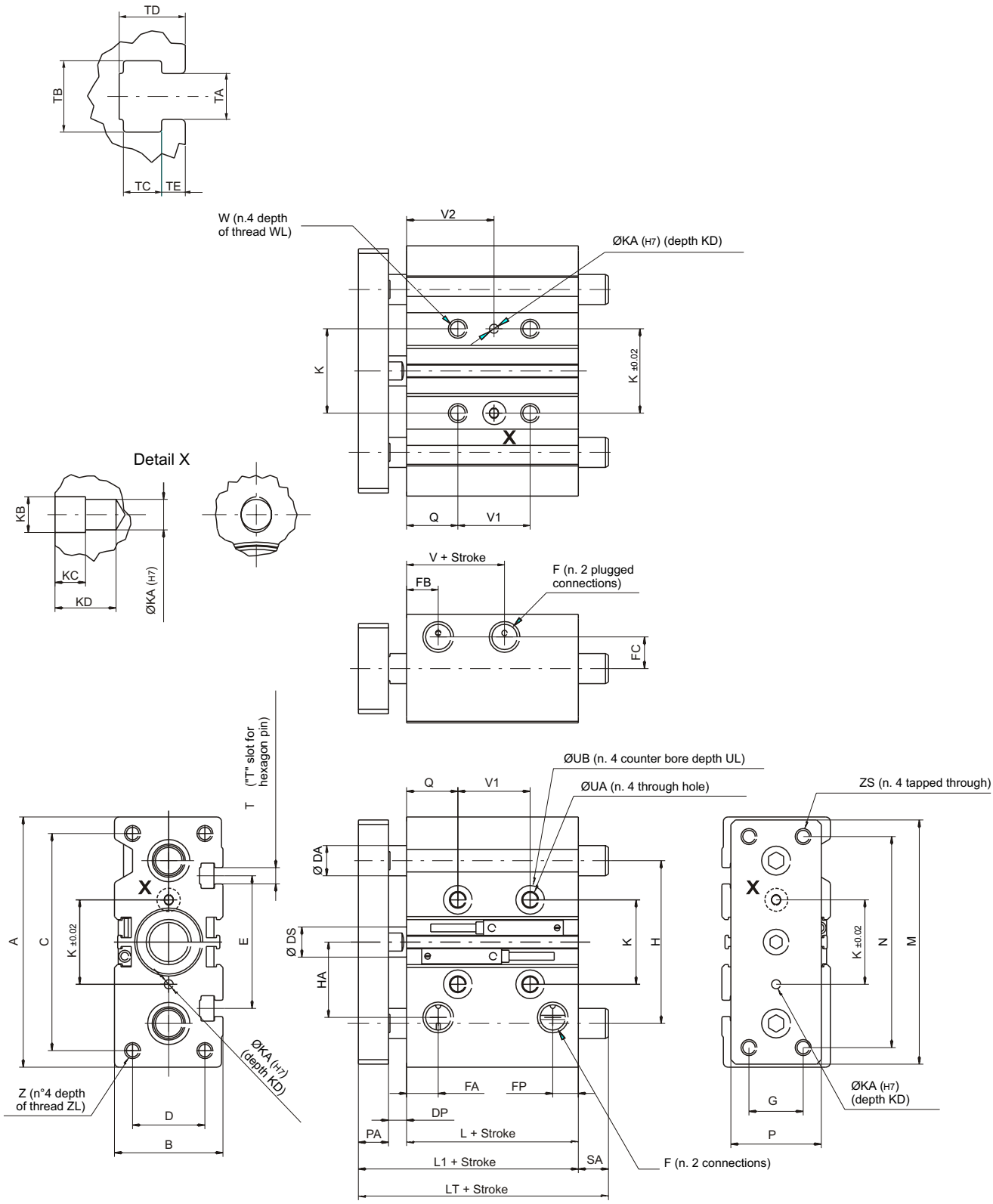

Bore	A	B	C	D	DP	DS	E	F	FA	FB	FC	FP	G	H	HA	K	KA	KB	KC	KD	L	L1	M
20	83	36	72	24	6	10	44	G1/8	10,5	10,5	10,5	8,5	18	54	25	28	3	3,5	3	6	37	53	81
25	93	42	82	30	6	12	50	G1/8	11,5	11,5	13,5	9	26	64	28,5	34	4	4,5	3	6	37,5	53,5	91
32	112	48	98	34	10	16	63	G1/8	12,5	12,5	15	9	30	78	34	42	4	4,5	3	6	37,5	59,5	110
40	120	54	106	40	10	16	72	G1/8	14	14	18	10	30	86	38	50	4	4,5	3	6	44	66	118
50	148	64	130	46	13	20	92	G1/4	14	12	21,5	11	40	110	47	66	5	6	4	8	44	72	146
63	162	78	142	58	13	20	110	G1/4	16,5	16,5	28	13,5	50	124	55	80	5	6	4	8	49	77	158

Bore	N	PA	P	Q	T	TA	TB	TC	TD	TE	UA	UB	UL	V	W	WL	Z	ZL	ZS
20	70	10	30	17	M5	5,4	8,4	4,5	7,8	2,8	5,6	9,5	5,5	12,5	M6x 1	12	M5x0,8	13	M5x0,8
25	78	10	38	17	M5	5,4	8,4	4,5	8,2	3	5,6	9,5	5,5	12,5	M6x 1	12	M6x 1	15	M6x 1
32	96	12	44	21	M6	6,5	11	5,5	9,5	3,5	6,6	11	7,5	7	M8x1,25	16	M8x1,25	20	M8x1,25
40	104	12	44	22	M6	6,5	11	5,5	11	4	6,6	11	7,5	13	M8x1,25	16	M8x1,25	20	M8x1,25
50	130	15	60	24	M8	8,5	14	7,5	14	4,5	8,6	14	9	9	M10x1,5	20	M10x1,5	22	M10x1,5
63	130	15	70	24	M10	11	18	10	19	7	8,6	14	9	14	M10x1,5	20	M10x1,5	22	M10x1,5

	V1			V2		
Bor e	stroke ≤ 30	30<stro ke≤100	100<stro ke≤200	stroke ≤ 30	30<stro ke≤100	100<stro ke≤200
20	24	44	120	29	39	77
25	24	44	120	29	39	77
	stroke ≤ 25	25<stro ke≤100	100<stro ke≤200	stroke ≤ 25	25<stro ke≤100	100<stro ke≤200
32	24	48	124	33	45	83
40	24	48	124	34	46	84
50	24	48	124	36	48	86
63	28	52	128	38	50	88

Control unit with bronz e bushes

	LT		DA	SA	
Bor e	stroke ≤ 50	50<stro ke≤200		stroke ≤ 50	50<stro ke≤200
20	53	84,5	12	0	31,5
25	53,5	85	16	0	31,5
32	97	102	20	37,5	42,5
40	97	102	20	31	36
50	106,5	118	25	34,5	46
63	106,5	118	25	29,5	41

Control unit w ith bearing bushes

	LT			DA	SA		
Bor e	stroke ≤ 30	30<stro ke≤100	100<stro ke≤200		stroke ≤ 30	30<stro ke≤100	100<stro ke≤200
20	63	80	104	10	10	27	51
25	69,5	85,5	104,5	13	16	32	51
	stroke ≤ 50	50<stro ke≤100	100<stro ke≤200		stroke ≤ 50	50<stro ke≤100	100<stro ke≤200
32	81	98	118	16	21,5	38,5	58,5
40	81	98	118	16	15	32	52
50	93	114	134	20	21	42	62
63	93	114	134	20	16	37	57

Stroke tolerance: +1.5mm

Cylinder theoretic force

Bore	Piston area (mm^2)		Force (N)								
Ø20	Out	314	63	94	126	157	188	220	251	283	314
	In	236	47	71	94	118	142	165	189	212	236
Ø25	Out	491	98	147	196	246	295	344	393	442	491
	In	378	76	113	151	189	227	265	302	340	378
Ø32	Out	804	161	241	322	402	482	563	643	724	804
	In	603	121	181	241	302	362	422	482	543	603
Ø40	Out	1257	251	377	503	629	754	880	1006	1131	1257
	In	1056	211	317	422	528	634	739	845	950	1056
Ø50	Out	1963	393	589	785	982	1178	1374	1570	1767	1963
	In	1649	330	495	660	825	989	1154	1319	1484	1649
Ø63	Out	3117	623	935	1247	1559	1870	2182	2494	2805	3117
	In	2803	561	841	1121	1402	1682	1962	2242	2523	2803
			2	3	4	5	6	7	8	9	10
			Working pressure (bar)								

Weights

Control unit with bronze bushes

Bore	Weight (gr)										
20	670		750	830	910	1170	1370	1570	1760	1960	2160
25	950		1050	1160	1270	1650	1920	2190	2470	2740	3010
32		1690			2070	2470	2850	3240	3620	4000	4380
40		1950			2370	2830	3250	3680	4100	4530	4950
50		3360			4000	4730	5370	6010	6650	7290	7930
63		4180			4940	5780	6540	7290	8050	8800	9560
	Weight of moving parts (gr)										
20	330		350	380	400	520	580	640	700	760	820
25	520		560	600	640	840	950	1050	1150	1250	1350
32		1070			1230	1420	1580	1740	1910	2070	2230
40		1140			1300	1490	1650	1810	1980	2140	2300
50		2150			2400	2750	3000	3260	3510	3760	4020
63		2500			2750	3090	3350	3600	3860	4110	4360
	20	25	30	40	50	75	100	125	150	175	200
	Stroke										

Control unit with bearing bushes

Bore	Weight (gr)										
20	700		770	890	970	1140	1310	1520	1690	1870	2040
25	980		1070	1250	1340	1570	1810	2080	2310	2540	2770
32		1540			1850	2300	2620	2990	3310	3620	3940
40		1790			2150	2640	3000	3420	3780	4140	4500
50		3110			3660	4410	4960	5600	6150	6700	7250
63		3930			4590	5460	6120	6880	7540	8210	8870
	Weight of moving parts (gr)										
20	310		330	370	390	440	480	560	600	650	700
25	490		520	580	610	690	760	880	950	1020	1100
32		820			940	1110	1230	1410	1530	1650	1770
40		890			1010	1180	1300	1480	1600	1720	1830
50		1770			1950	2240	2430	2710	2890	3080	3270
63		2110			2300	2590	2770	3050	3240	3420	3610
	20	25	30	40	50	75	100	125	150	175	200
	Stroke										

How to calculate the Momentum

$$Ec = \frac{1}{2} m \quad V^2 (J)$$

m = Total moving mass: weight of driven object added to weight of cylinder moving parts (kg).
V = max. speed: equal to average speed + 40% (m/sec)

Maximum permissible Momentum (using this formula)

Allesaggio	Ec (J)
ø20	0,1
ø25	0,2
ø32	0,3
ø40	0,5
ø50	0,9
ø63	1,55

Permissible lateral load (applied on overall plate)

Control unit with bronze bush

Bore	Load (N)										
Ø20	49		43	38	35	87	75	66	59	54	49
Ø25	69		60	54	49	116	100	88	79	71	65
Ø32		203			164	182	159	142	127	116	106
Ø40		203			164	182	159	142	127	116	106
Ø50		296			245	273	241	216	195	179	164
Ø63		296			245	273	241	216	195	179	164
	20	25	30	40	50	75	100	125	150	175	200
	Stroke										

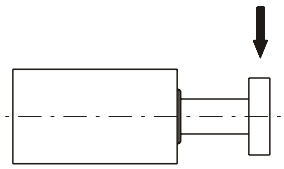

Control unit with bearing bush

Bore	Load (N)										
Ø20	58		48	101	90	70	58	62	54	48	43
Ø25	69		68	132	118	93	77	80	70	62	55
Ø32		191			157	164	144	203	186	171	158
Ø40		190			157	163	144	203	185	171	158
Ø50		208			173	223	199	264	242	224	207
Ø63		206			171	221	196	262	240	221	205
	20	25	30	40	50	75	100	125	150	175	200
	Stroke										

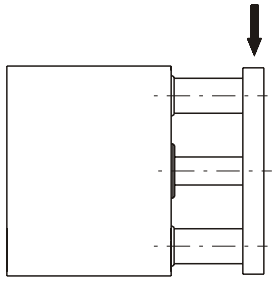

Recommended torque moments

Control unit with bronze bush

Bore	Load (N)										
Ø20	1,1		0,9	0,8	0,8	1,9	1,6	1,4	1,3	1,2	1,1
Ø25	1,8		1,6	1,4	1,3	3,0	2,6	2,3	2,0	1,8	1,7
Ø32		6,4			5,1	5,7	5,0	4,4	4,0	3,6	3,3
Ø40		7,0			5,7	6,3	5,5	4,9	4,4	4,0	3,7
Ø50		13,0			10,8	12,0	10,6	9,5	8,6	7,9	7,2
Ø63		14,7			12,1	13,5	11,9	10,7	9,7	8,9	8,2
	20	25	30	40	50	75	100	125	150	175	200
	Stroke										

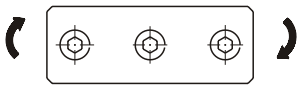

Control unit with bearing bush

Bore	Load (N)										
Ø20	1,3		1,0	2,2	1,9	1,5	1,3	1,3	1,2	1,0	0,9
Ø25	2,1		1,8	3,4	3,0	2,4	2,0	2,1	1,8	1,6	1,4
Ø32		6,0			4,9	5,1	4,5	6,3	5,8	5,3	4,9
Ø40		6,6			5,4	5,6	5,0	7,0	6,4	5,9	5,4
Ø50		9,2			7,6	9,8	8,7	11,6	10,7	9,8	9,1
Ø63		10,2			8,5	11,0	9,7	13,0	11,9	11,0	10,2
	20	25	30	40	50	75	100	125	150	175	200
	Stroke										

Stopper device applications

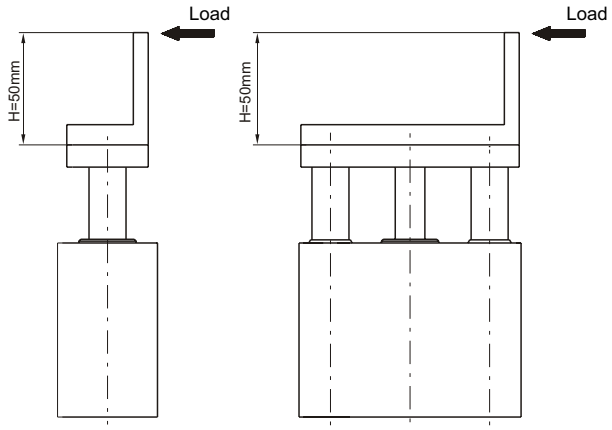

ATTENTION: if H>50 mm use larger bore

Control unit with bronze bushes

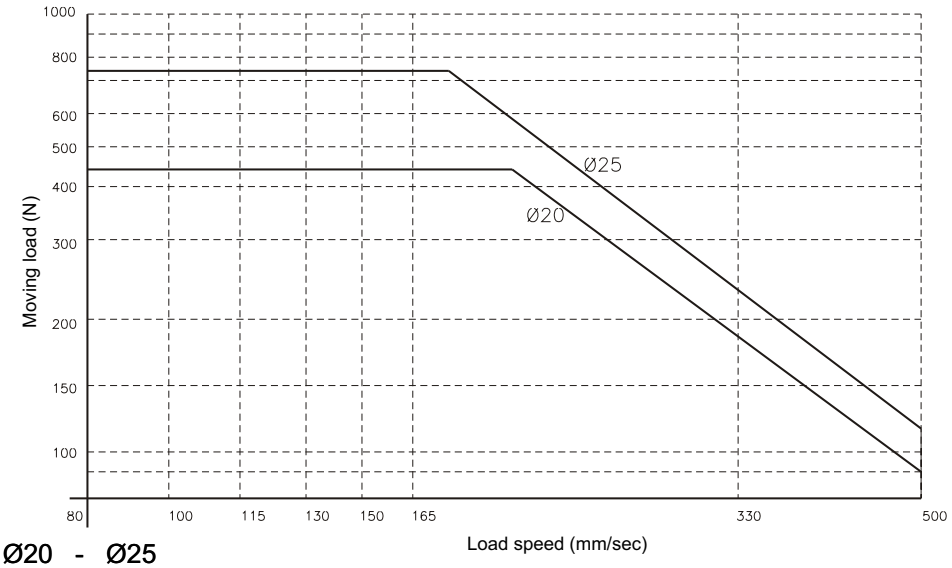

Ø20 - Ø25
ATTENTION: use with stroke £ 30 mm

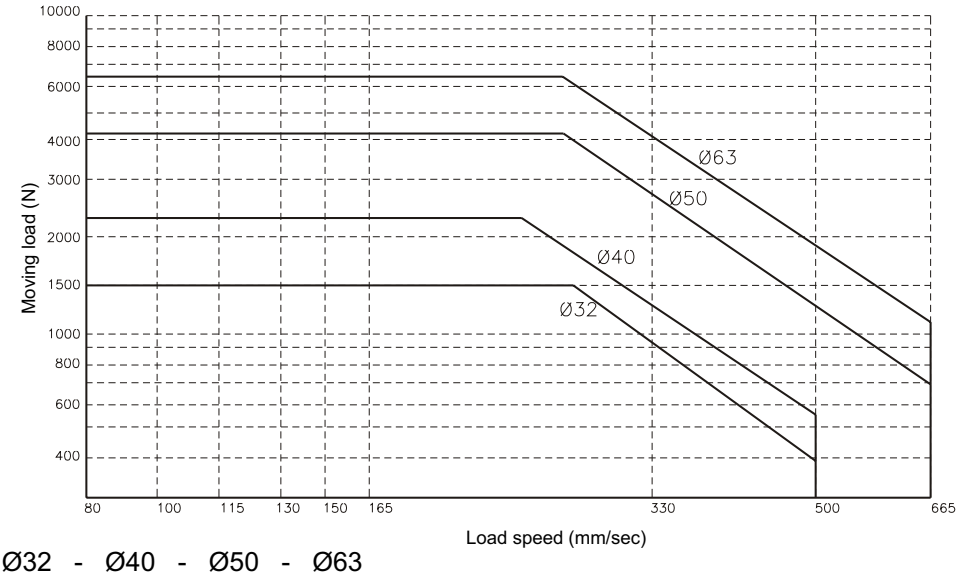

Ø32 - Ø40 - Ø50 - Ø63
ATTENTION: use with stroke £ 50 mm

Handling applications

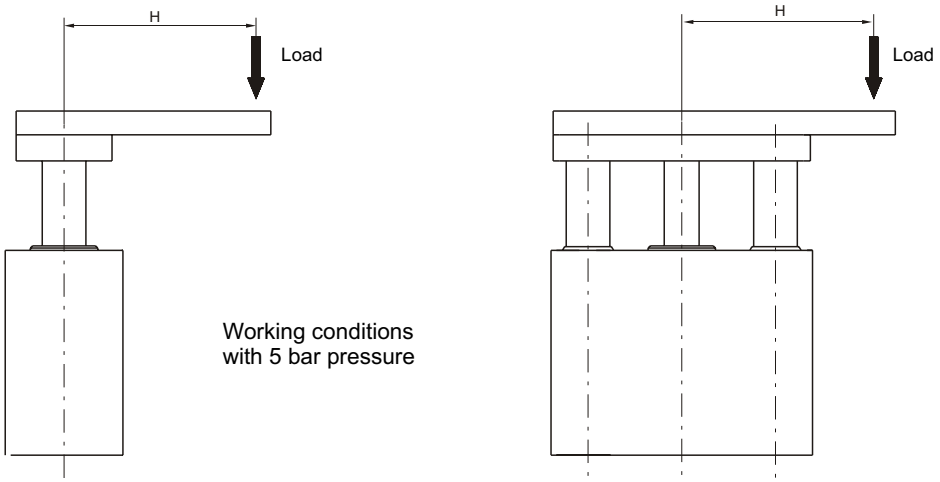

Control unit with bronze bushes

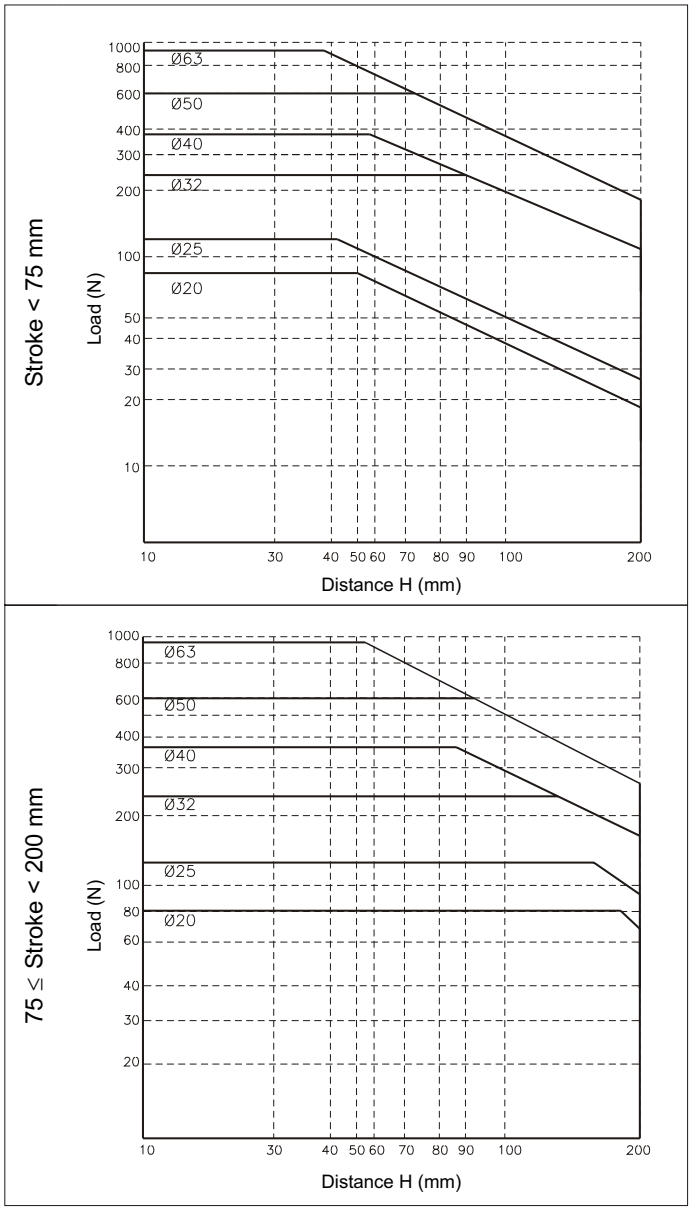

Handling applications

Control unit with bearing bushes

Ø20 ÷ Ø25

Stroke < 40 mm

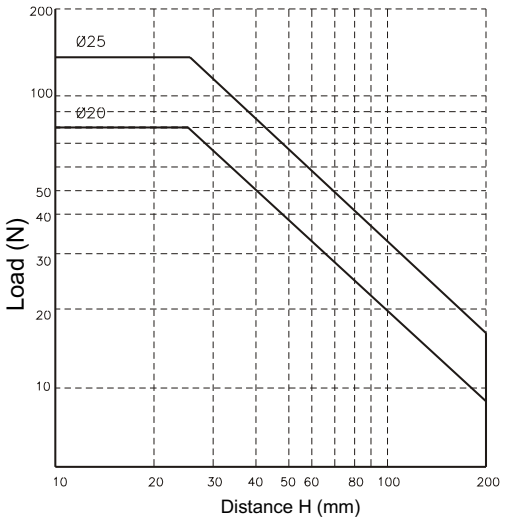

40 ≤ Stroke < 125 mm

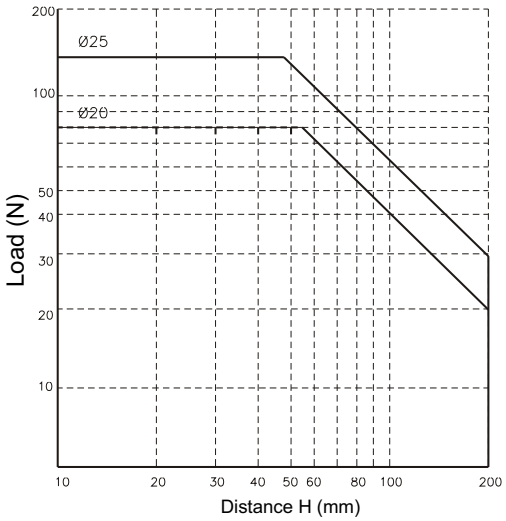

125 ≤ Stroke < 200 mm

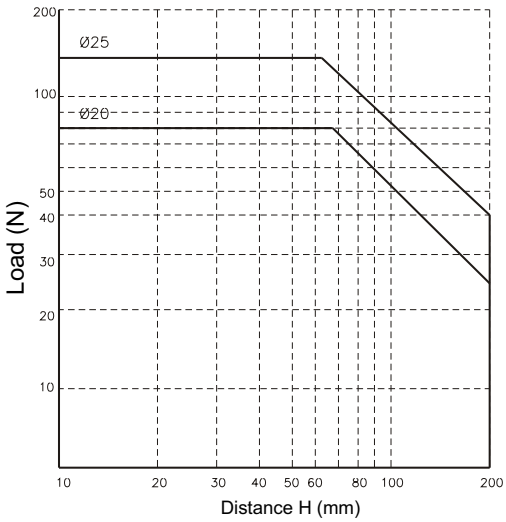

Ø32 ÷ Ø63

Stroke < 75 mm

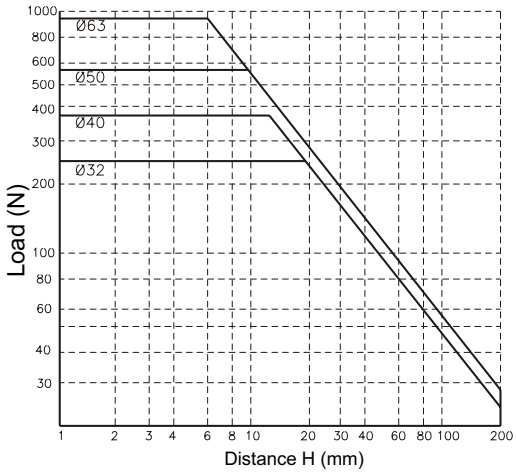

75 ≤ Stroke < 125 mm

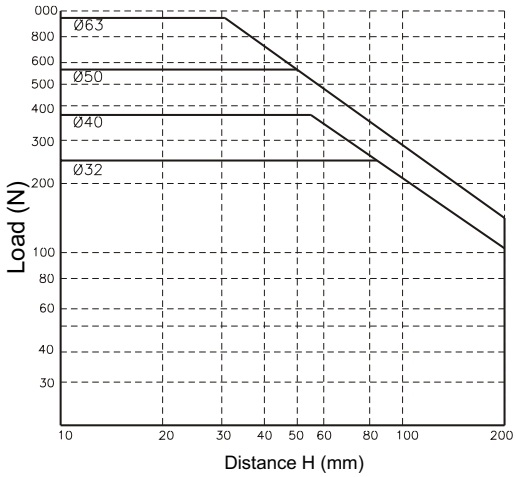

125 ≤ Stroke < 200 mm

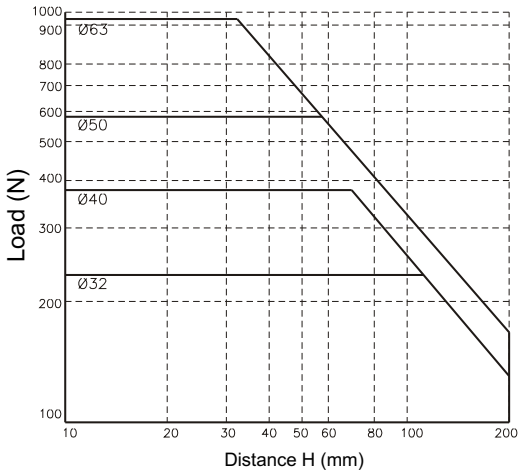

Sensor c/w 2,5 m. cable

Weight gr. 27

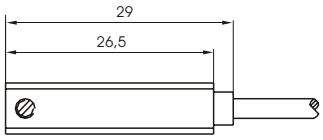

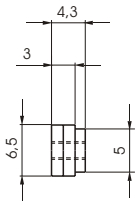

Sensor c/w M8 connector (300 mm cable)

Weight gr. 15

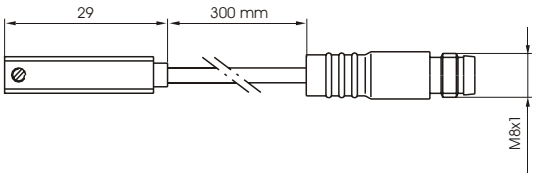

Ordering codes	
1580.U	Reed bulb sensor with led and 2.5 m cable
1580.HAP	PNP sensor Hall effect with led and 2.5 m cable
MRS.U	Reed bulb sensor with led and connector
MHS.P	PNP sensor Hall effect with led and connector
MC1	M8 in line connector with 2.5 m cable (2 wires)
MC2	M8 in line connector with 5 m cable (2 wires)
MCH1	M8 in line connector with 2.5 m cable (3 wires)
MCH2	M8 in line connector with 5 m cable (3 wires)

Technical characteristics

	1580.U	MRS.U	1580.HAP	MHS.P
Type of contact	N.A.			
Maximum current (pulses of 0.5 sec)	0,1A		0,2A	
Maximum permanent current	0,1A		0,2A	
Maximum permanent power	6VA		4W	
Voltage range A.C.	3 ÷ 30V		/	
Voltage range D.C.	3 ÷ 30V		12 ÷ 30V	
Working temperature	-20° C ÷ 70°C			
Maximum voltage drop	3V			
Cable section	2x0,14		3x0,14	
Degree of protection	IP 65			
Connecting time	0,5 ms		0,8 µs	
Disconnecting time	0,1 ms		0,3 µs	
Average life (operations)	10^7		10^9	
Repetition of intervention point	± 0,1			

NOTE: Pay attention to the connected loads which should not exceed recommendations

***Reed bulb sensor: connection can be made either to negative or positive pole**

Diagrams and connection

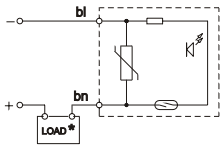

With Reed bulb

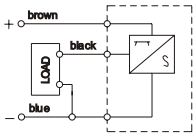

Hall effect